Physical Education MOCK 2019

Diploma teacher education (Shanzu Teachers Training College Academy)

Scan to open on Studocu

Studocu is not sponsored or endorsed by any college or university
Downloaded by Patrick Ngobiro (pngobiro@gmail.com)

SHANZU TEACHERS TRAINING COLLEGE

Name: _____ Index No: _____

1014
PI PHYSICAL EDUCATION
MOCK EXAMINATION
MARCH 2019
TIME: 2 Hours

Class : _____

Candidate's Signature: _____

Date: _____

PRIMARY TEACHERS MOCK EXAMINATION

PHYSICAL EDUCATION

2 Hours

INSTRUCTIONS TO CANDIDATES

1. Write your name, college class and index number in the spaces provided.
2. Sign and write the date of the examination in the spaces provided.
3. This question paper consists of two sections **A** and **B.**
4. Answer all the questions in section **A.**
5. Answer any **TWO** questions from section **B**.
6. Answers to **ALL** the questions must be written in the spaces provided in the booklet.
7. **DO NOT** remove any pages from this booklet.
8. Candidate should answer the questions in English.

For Examiner's Use Only

Section	Question	Maximum score	Candidate's score
A	1	7	
	2	17	
	3	12	
	4	11	
	5	13	
B	6	20	
	7	20	
	8	20	
		Total Score	

This paper consists of 8 printed pages

Candidate should check the question paper to ascertain that all the pages are printed as indicated and that no questions are missing.

This document is available on studocu

Downloaded by Patrick Ngobiro (pngobiro@gmail.com)

SECTION A: (60 MARKS)

Answer ALL the questions in this section in the spaces provided

1. (a) Define the following terms as used in P.E

(2 marks)

(i) Leisure:_____

_____

_____

(ii) Exercise:_____

_____

_____

(b) (i) State **three** ways through which gender issues are addressed in Physical Education.

(3 marks)

_____

_____

_____

(ii)Highlight **two** physical benefit of participating in physical activities (2 marks)

_____

_____

2. (a) (i) State any **three** factors to consider during group activities in an outdoor P.E lesson.

(3 marks)

_____

_____

_____

(ii) State any **three** reasons for using apparatus in a P.E lesson. (3 marks)

_____

_____

_____

(iii) List down **two** components of a P.E scheme of work. (2 marks)

_____

_____

Downloaded by Patrick Ngobiro (pngobiro@gmail.com)

(iv) State any **three** dangers of improvised apparatus (3 marks)

_____
_____
_____

(b) State any **three** factors to consider when purchasing a discus implement. (3 marks)

_____
_____
_____

(c) Give any **three** examples of a crouch start. (3 marks)

_____
_____
_____

3. (a) State **three** roles of a spotter during gymnastics. (3 marks)

_____
_____
_____

(b) State any **three** progressive stages of performing forward roll. (3 marks)

_____
_____
_____

(c) Highlight any **three** attacking skills used in the game of Rounders. (3 marks)

_____
_____
_____

(d) Name any **three** officials in the game of Softball. (3 marks)

_____
_____
_____

4. (a) Explain the following terms as used in Swimming. (3 marks)

(i) Buoyancy_____
_____

(ii) Floating_____
_____

(iii) Glide_____
_____

This document is available on studocu

Downloaded by Patrick Ngobiro (pngobiro@gmail.com)

(b) Give any **two** instruments used during dance (2 marks)

_____

_____

(c) Briefly explain rope grip for anchor in tug of war (3 marks)

_____

_____

_____

(d) Give any **three** specifications of rugby ball (3marks)

_____

_____

_____

5. (a) State any **two** characteristics of voluntary muscles (2 marks)

_____

_____

(b) Highlight any **three** progressive stages of First Aid (3marks)

_____

_____

_____

(c) Give any **three** body types that cannot be changed by exercise or diet (3marks)

_____

_____

_____

(d) State any **three** factors to consider when selecting a format to use during competition. (3 marks)

_____

_____

_____

(e) State any **two** ways through which a teacher can avoid being legally liable in sports. (2 marks)

_____

_____

Downloaded by Patrick Ngobiro (pngobiro@gmail.com)

SECTION B (40 MARKS)

Answer any two questions from this section

7. (a) (i)Explain the application of the following time rules in a game of basketball.

(4 marks)

3 seconds

_____

_____

5 seconds

_____

_____

8 seconds

_____

_____

24seconds

_____

_____

(ii) Describe how lay-up shot is executed in a game of Basketball. (4 marks)

_____

_____

_____

_____

(b) (i) State **six** instances that would lead to the award of penalty kick in a game of soccer.

(6 marks)

_____

_____

_____

_____

_____

_____

(ii) Describe the procedure of taking a "throw-in" in a game of Soccer. (6 marks)

_____

_____

_____

_____

_____

_____

This document is available on studocu

Downloaded by Patrick Ngobiro (pngobiro@gmail.com)

8. (a) (i) Identify **three** conditions that should be observed during a penalty pass in a game of Netball. (3 marks)

(ii) Outline **five** factors to be emphasized when teaching single handed shoulder pass in a game of Netball. (5 marks)

(b) State any **two** examples of the following sanctions in Netball. (2marks)

(i) team sections

(ii) player sanctions

(c) (i) State **two** occasions when a player may dribble in the game of Hockey. (2marks)

(ii) Mention **four** uses of the shooting circle in the game of Hockey. (4marks)

(iii) Outline the teaching points of a scoop in the game of Hockey (3marks)

(iv) Which is the international body that governs the game of Hockey (1 marks)

Downloaded by Patrick Ngobiro (pngobiro@gmail.com)

9. (a) (i) Identify the following parts of a Handball court. (6 marks)

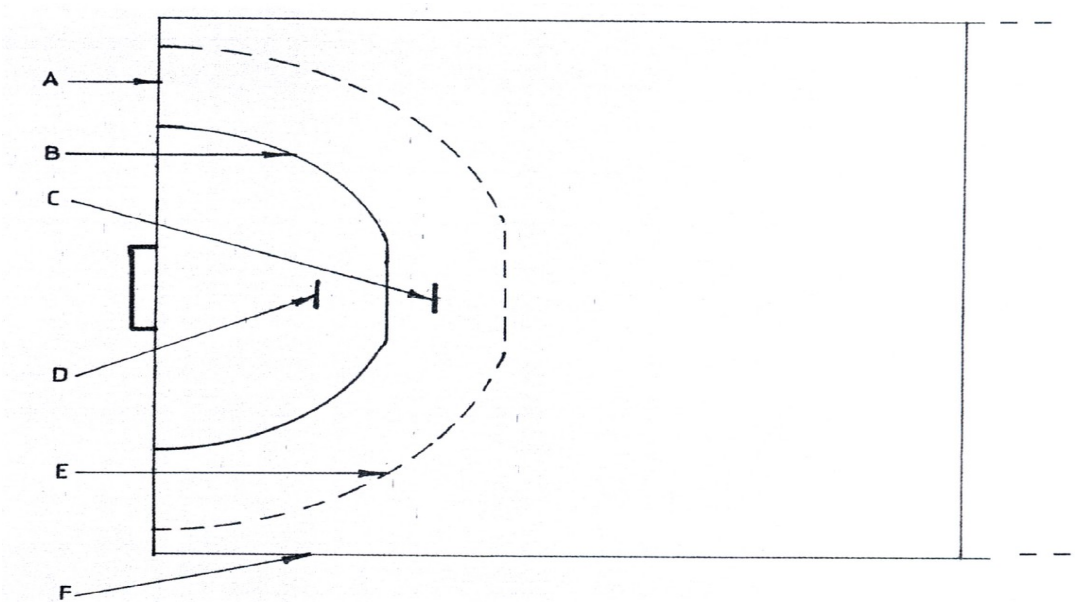

A-_____

B-_____

C-_____

D-_____

E-_____

F-_____

(ii)Describe the progressive teaching points for the dive shot in Handball (4marks)

_____
_____
_____
_____
_____

(iii) Name **two** ancient games similar to the present game of Handball (2marks)

_____
_____

This document is available on studocu

Downloaded by Patrick Ngobiro (pngobiro@gmail.com)

(b) (i) What is a rotational fault as applied in the game of Volleyball. (1mark)

_____

(ii) Identify **two** service fouls that may occur during execution of a service in Volleyball. (2marks)

_____

_____

(iii) Describe the procedure followed when a player is "given" red card in a game of Volleyball.

(2marks)

_____

_____

(iv) Highlight **three** duties of the line judges during a game of Volleyball (3marks)

_____

_____

_____

Downloaded by Patrick Ngobiro (pngobiro@gmail.com)